G13XX, TYPE B SERIES

CONTROLLER ENCLOSURES

G0312

PRODUCT INFORMATION

MATERIAL:

- High impact ABS UL94-HB plastic, grey and black.

FEATURES:

- Ideal for remote controller, testing instrument.
- G0312-AA battery contact kit is available for ordering.

ITEM No.	EXTERNAL DIMENSION(MM)
G1390G	181.5 x 65 x 27.6
G1390B	181.5 x 65 x 27.6
G0312	AA battery contact kit
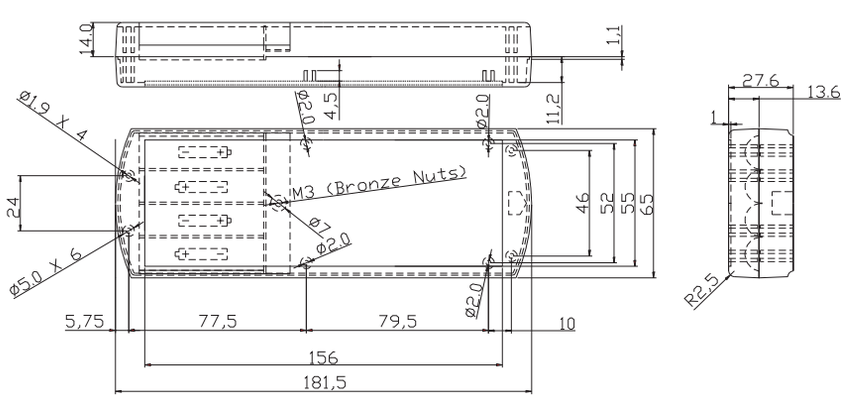
G0312